Notes

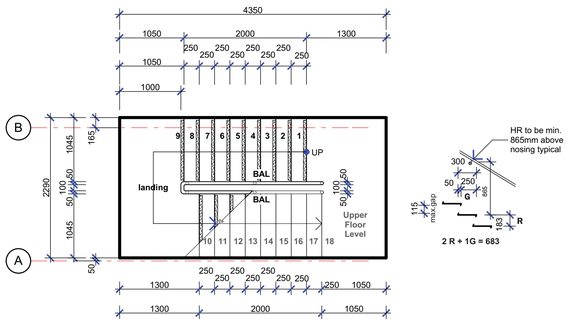


## WEST STAIR TYP. PLAN

1:50 A1
1:100 A3

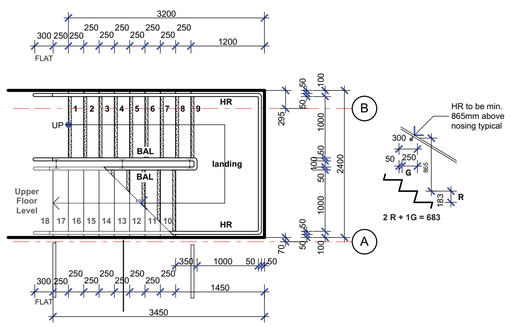


## EAST STAIR TYP. PLAN

1:50 A1
1:100 A3

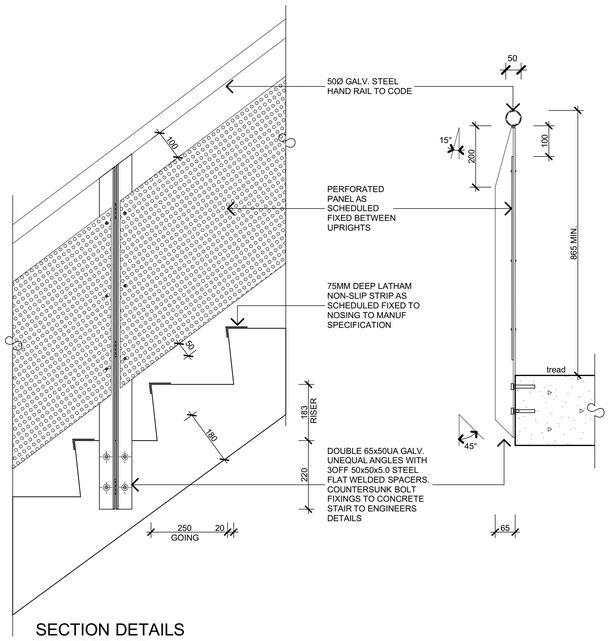


## SECTION DETAILS BALUSTRADE

TYPICAL EAST STAIR

1:10 A1
1:20 A3

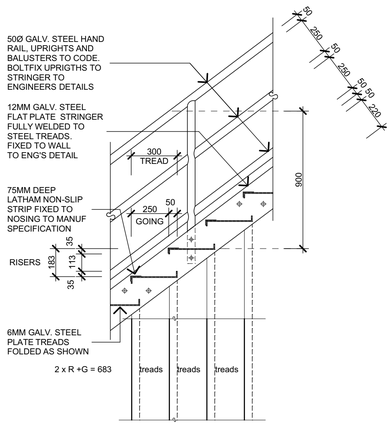


## SECTION DETAIL - WEST STAIR

1:20 A1
1:40 A3

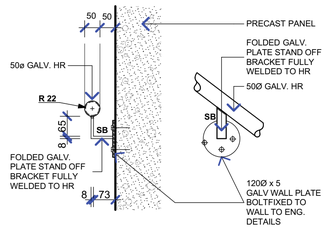


SB : Stand off bracket

## HAND RAIL

TYPICAL DETAIL

1:5 A1
1:10 A3

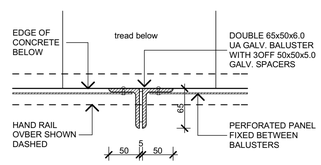


## BALUSTER & HAND RAIL

TYPICAL PLAN DETAIL

1:5 A1
1:10 A3

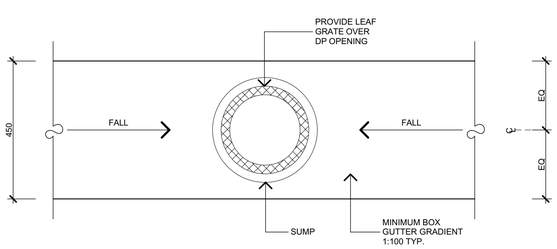


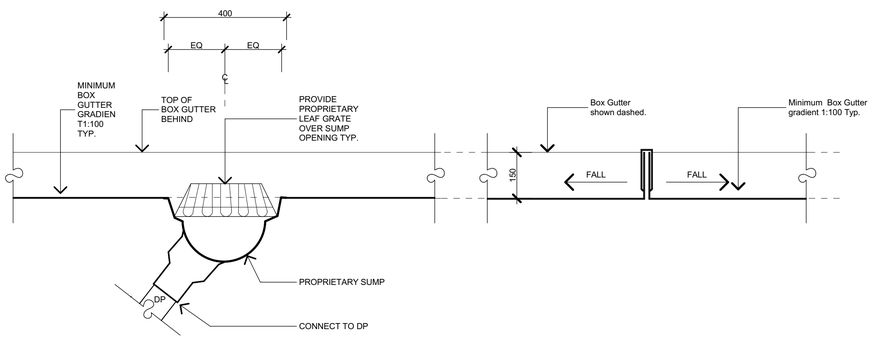


## BOX GUTTER

1:10 TYP **DETAIL**

**ISSUED FOR CONSTRUCTION**
**18.11.2016**

| Issue | Date | Amendments | By |
|---|---|---|---|
| C | 18.11.2016 | ISSUED FOR CONSTRUCTION | JS |
| B | 12.10.2016 | EAST STAIR REVISED TO CONCRETE. BALUSTRADE DETAILS TO EAST STAIRS REVISED. NON-SLIP NOSING STRIPS ADDED TO BOTH STAIRS. WEST STAIR SECTION DETAIL REVISED. BALUSTER ARRANGEMENT SHOWN ON STAIR LAYOUTS. | JS |
| A | 16.09.2016 | ISSUED FOR BUILDING RULES CONSENT | JS |


Nelson Architects

Architecture
Interior design
Project Management

11 Eliza St. Adelaide SA 5000
P +618 8231 4434
F +618 8211 7701
E nelson@nelsonarchitects.com.au


Project
130 CHURCHILL RD APARTMENTS
130 Churchill Road
Prospect SA 5082

Drawing Title
STAIR DETAILS

| Drawn | Checked | Scale |
|---|---|---|
| JG JS | JN | As Shown |
| Date Created | CAD File Name | |
| 22.07.16 | 02130 WD | |
| Drawing Number | Issue | |
| 02130 WD18 | C | |


Copyright of design and drawings are reserved. The contractor shall verify all dimensions and levels before commencing any works or shop drawings. Refer any discrepencies to the Architect. A printed copy of this drawing may not be to scale.
A.C.N. 008 215 558


Nelson Architects Pty Ltd